Section A-A

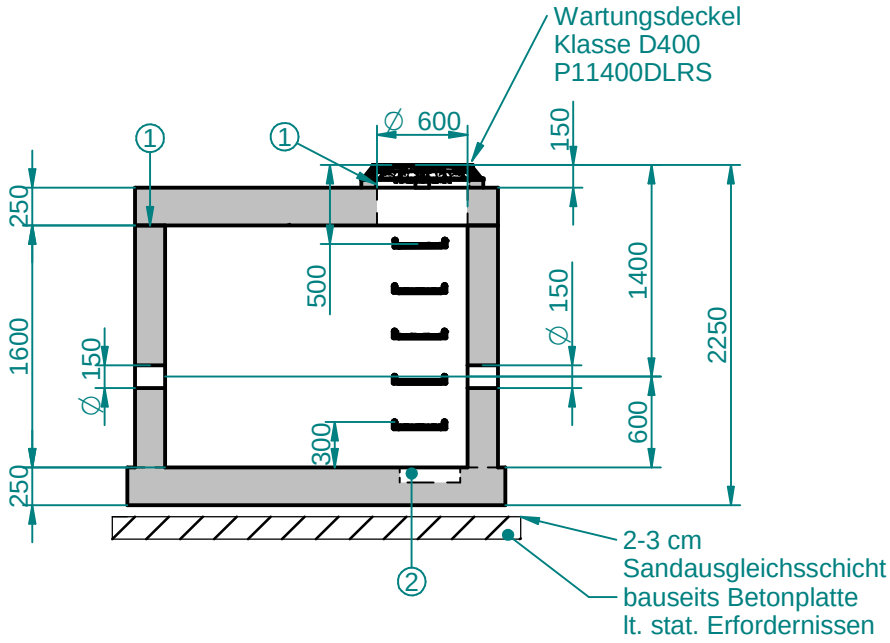

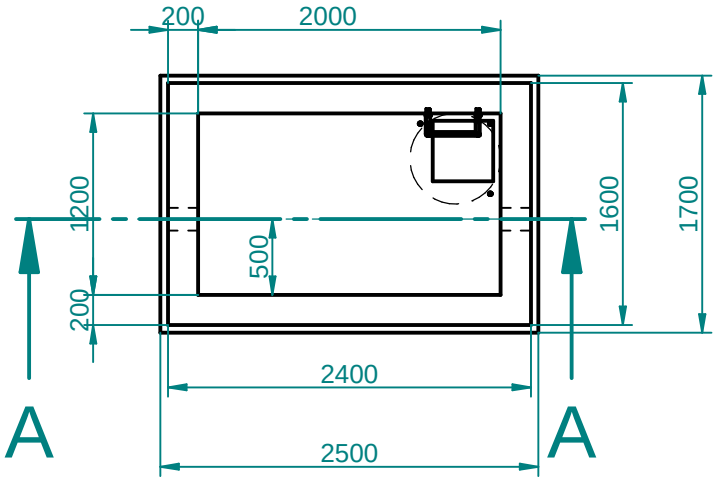

① Wasserdichtes verkleben bauseits

② Pumpensumpf 400x400x100mm

according to ISO 8015	edges ISO 13715	scale mass	standard -
		material - Beton	

	date	username
modeled	05.03.2025	M.P.
drawn	05.03.2025	M.P.
checked	05.03.2025	A.B.

name
Wasserzählerschacht DN50

WA-SCH-2012-D

draw# WA-SCH2012-D-5514-AT-D

Index

BVH:

purator TM

rev.	comment	date	name

CAD Original by SOLID EDGE
ANY modification in CAD ONLY

Wallner & Neubert GmbH

ISO 16016

Urheberschutz nach
Copy right acc. to
Droit d´auteur selon

Last modified by User1 at 2025-03-11 12:48:51
ModelName: WA-SCH-2012-D.asm
DocName: WA-SCH-2012-D.dft